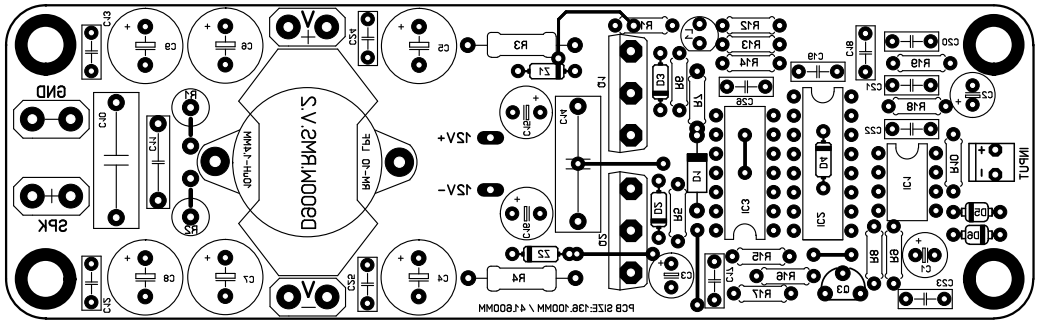
GND
SPK
12V+
12V-
INPUT
D.V.SWMOOD
PCB SIZE:136.400MM X 46.800MM