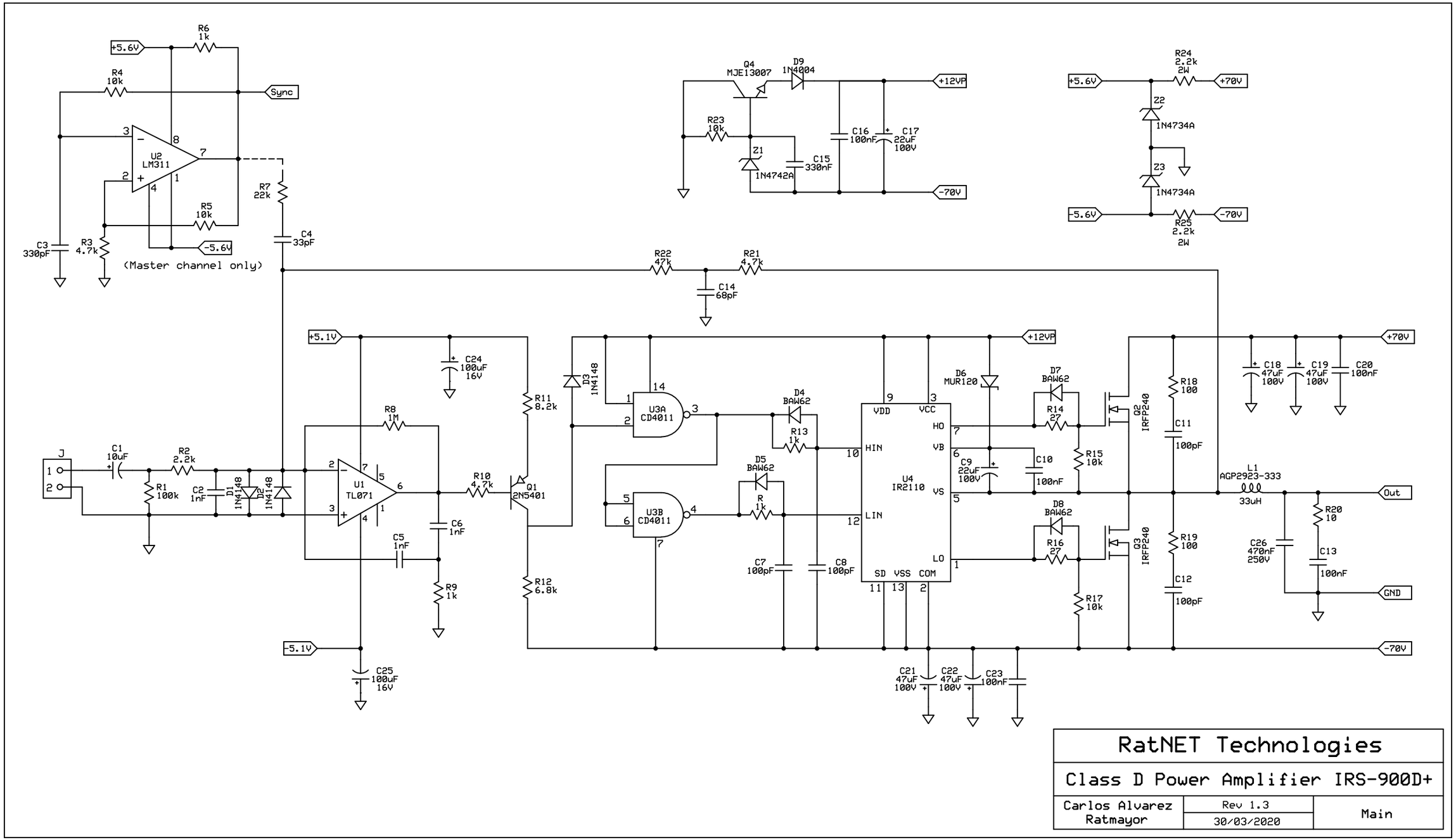

RatNET Technologies		
Class D Power Amplifier IRS-900D+		
Carlos Alvarez Ratmayor	Rev 1.3 30/03/2020	Main

12.2 x 5.1 cm

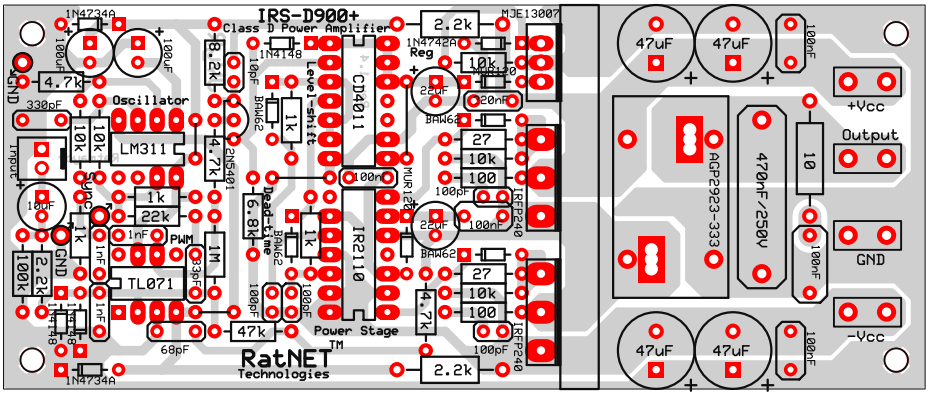
IRS-D900+
Class D Power Amplifier
Oscillator
LM311
TL071
PWM
Level-shift
Dead-time
CD4011
IR2110
Power Stage
Reg
RatNET
Technologies
TM
+Vcc
Output
GND
-Vcc
470nF/250V
AGP2923-3333
47uF
47uF
47uF
47uF
Input
GND
+Vcc
1N4734A
1N4148
1N4742A
MJE13007
IRFP240
BAW62
MUR120
2.2k
10k
27
100
4.7k
47k
68pF
100pF
100nF
1k
22k
1M
10
100k
330pF
10pF
20nF
22uF
9.81k
8.2k
2N5401

IRS-D000+
Class D Power Amplifier
Power Stage
RafNET
Technologies
Oscillator
LM311
CD4011
IRS110
LT0171
PWM
Sawtooth
Level-shift
Bridge
Bypass
Pulse
Gate
Dead-Time
Power Stage
Mosfet
Input
Output
GND
+Vcc
-Vcc
Ref 1.4
Copyright
Rafnet

IRS-D000+
Class D Power Amplifier
Power Stage
RafNET
Technologies
Oscillator
LM311
CD4011
IRS110
LT0171
PWM
Sawtooth
Level-shift
Bridge
Bypass
Pulse
Gate
Dead-Time
Power Stage
Mosfet
Input
Output
GND
+Vcc
-Vcc
Ref 1.4
Copyright
Rafnet