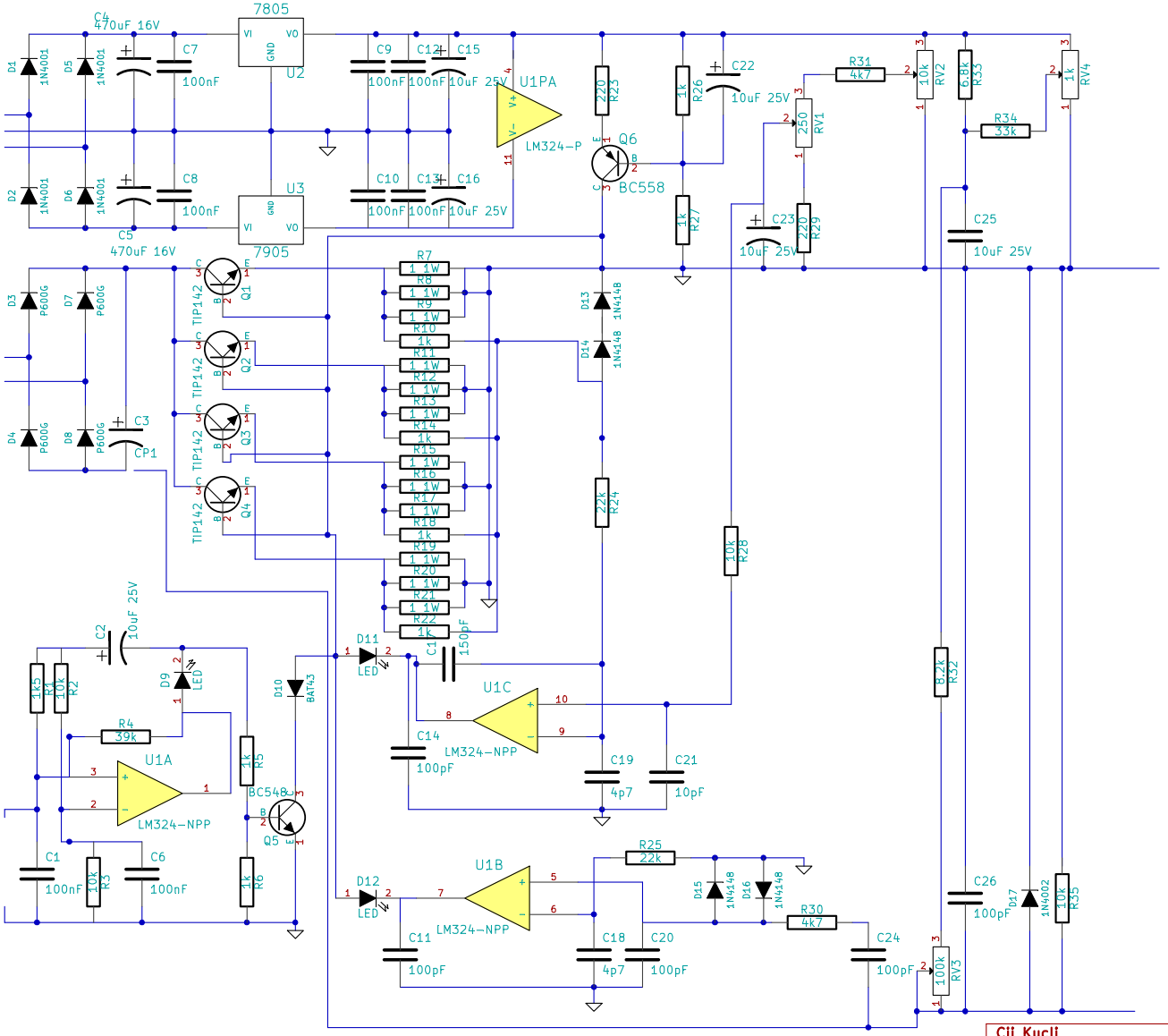

Cii Kucli		
File: DC_bench_supply.sch		
Sheet: /		
Title: 30V 4A DC Power Supply		
Size: A4	Date: 10 may 2012	**Rev: 2**
KiCad E.D.A. eeschema (2012-01-19 BZR 3256)-stable		Id: 1/1