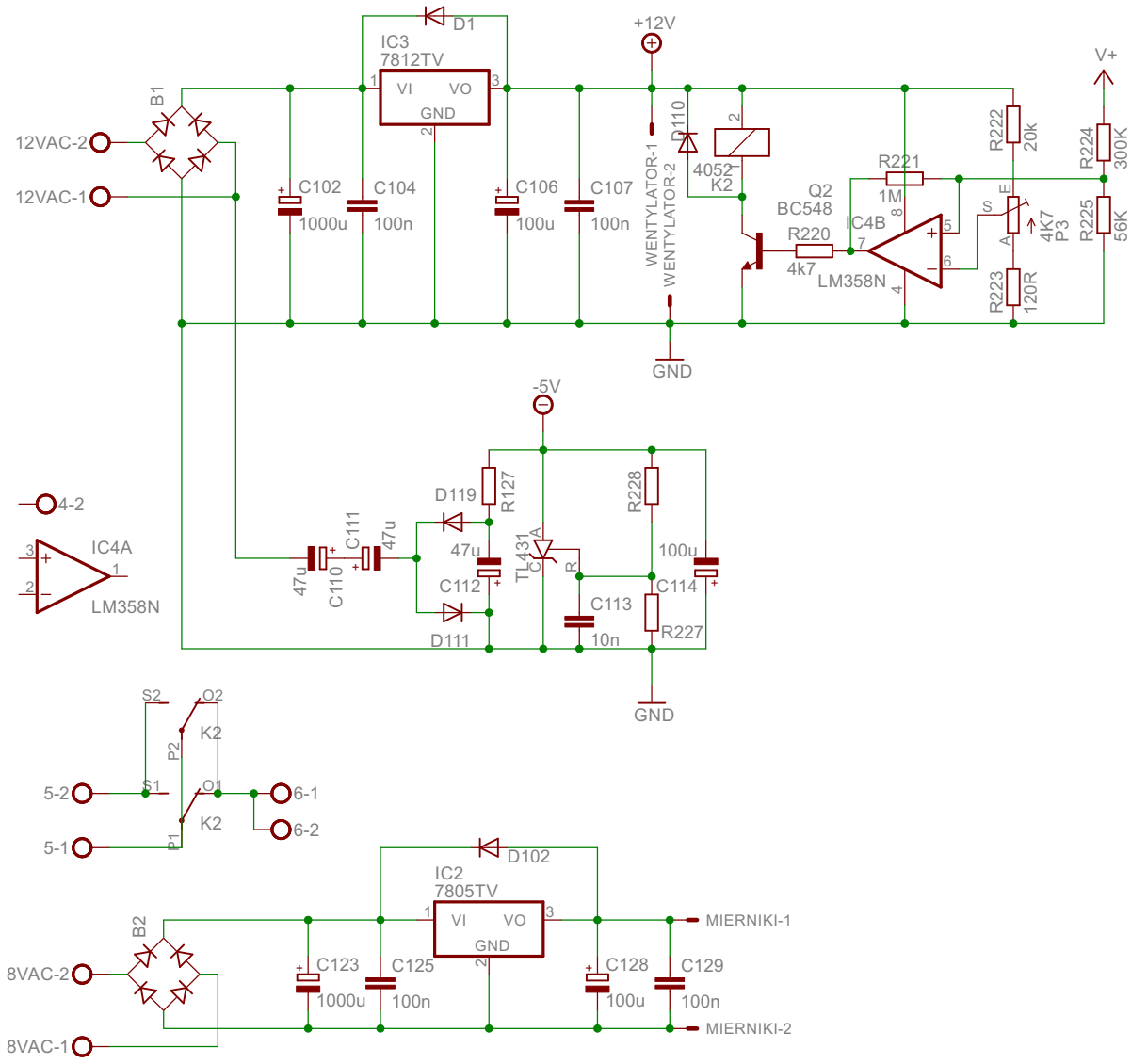
12VAC-2
12VAC-1
B1
IC3
7812TV
VI
VO
GND
D1
C102
1000u
C104
100n
C106
100u
C107
100n
+12V
WENTYLATOR-1
WENTYLATOR-2
D110
4052
K2
Q2
BC548
R220
4k7
IC4B
LM358N
R221
1M
R222
20k
R223
120R
4K7
P3
R224
300K
R225
56K
V+
GND
-5V
4-2
IC4A
LM358N
C110
47u
C111
47u
D119
R127
47u
C112
D111
TL431
R228
100u
C114
C113
10n
R227
GND
S2
O2
K2
P2
S1
O1
K2
P1
5-2
5-1
6-1
6-2
D102
IC2
7805TV
VI
VO
GND
B2
8VAC-2
8VAC-1
C123
1000u
C125
100n
C128
100u
C129
100n
MIERNIKI-1
MIERNIKI-2

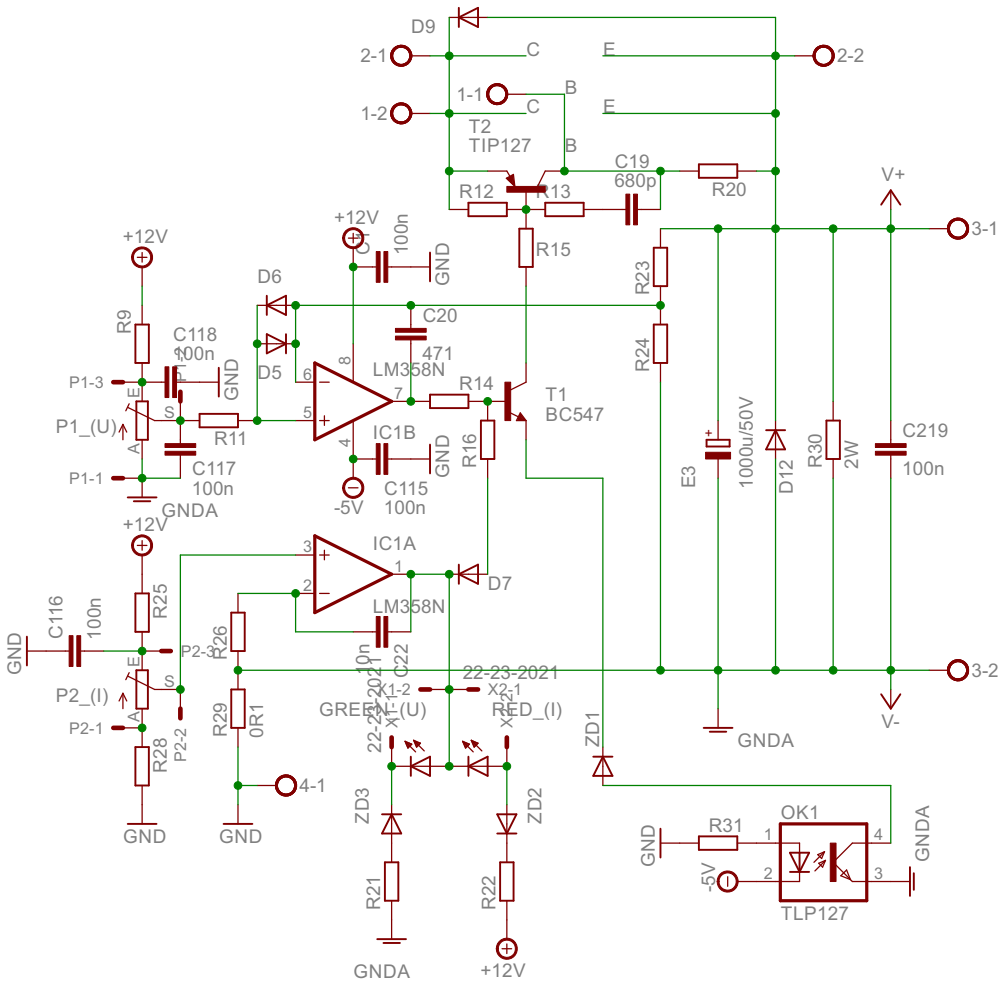

D9
2-1
2-2
1-1
1-2
T2
TIP127
C19
680p
R20
R12
R13
R15
V+
3-1
+12V
100n
GND
D6
D5
C20
471
LM358N
R14
T1
BC547
R23
R24
R9
C118
100n
P1-3
P1_(U)
P1-1
R11
C117
100n
GNDA
IC1B
C115
100n
-5V
R16
E3
1000u/50V
D12
R30
2W
C219
100n
IC1A
D7
LM358N
C116
100n
R25
P2-3
P2_(I)
P2-1
P2-2
R28
R26
R29
0R1
4-1
C22
22-23-2021
X1-2
X2-1
GREEN_(U)
RED_(I)
ZD1
3-2
V-
ZD3
ZD2
R21
R22
R31
OK1
TLP127