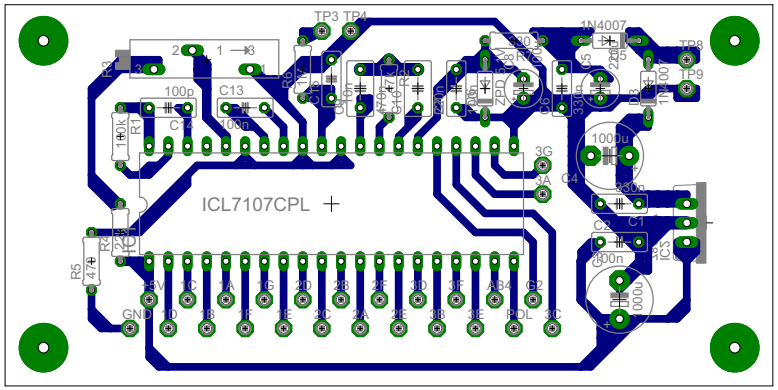
ICL7107CPL
TP3 TP4
1N4007
TP8
TP9
100p
C13
100n
R1
1k
R5
4.7k
R2
1k
C4
1000u
C1
C2
100n
C3
1000u
3G
3A
GND
REF
BUF
INT
AZ
BUF
IN-
IN+
3F
3E
3D
3C
3B
3A
AB4
B2
RDL
3G
3V
C2
1A
1B
2D
2B
2F
3D
3E
AB1
B1
GND
1D
1B
1F
1E
2C
2A
2E
3B
3F
RDL
3C